Revision A:
• Description of the air cleaning filter has been modified.

1 RoHS PARTS LIST

MSZ-GE22VAD2 MSZ-GE25VAD2 MSZ-GE35VAD2 MSZ-GE42VAD2 MSZ-GE50VAD2

1-1. INDOOR UNIT STRUCTURAL PARTS

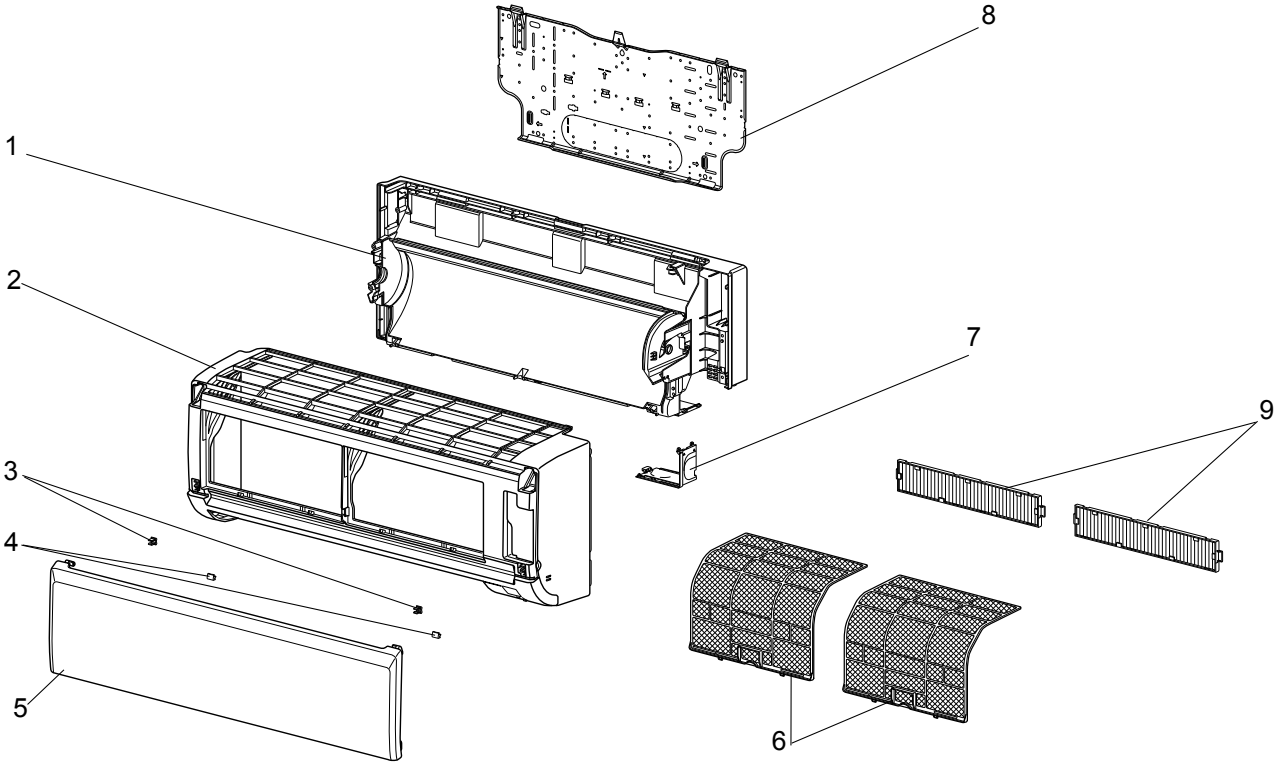

1-2. ACCESSORY AND REMOTE CONTROLLER

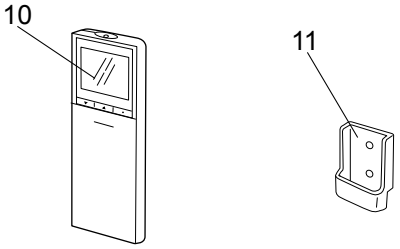

RoHS PARTS LIST

MSZ-GE22VAD2 MSZ-GE25VAD2 MSZ-GE35VAD2 MSZ-GE42VAD2 MSZ-GE50VAD2

1-3. INDOOR UNIT ELECTRICAL PARTS AND FUNCTIONAL PARTS

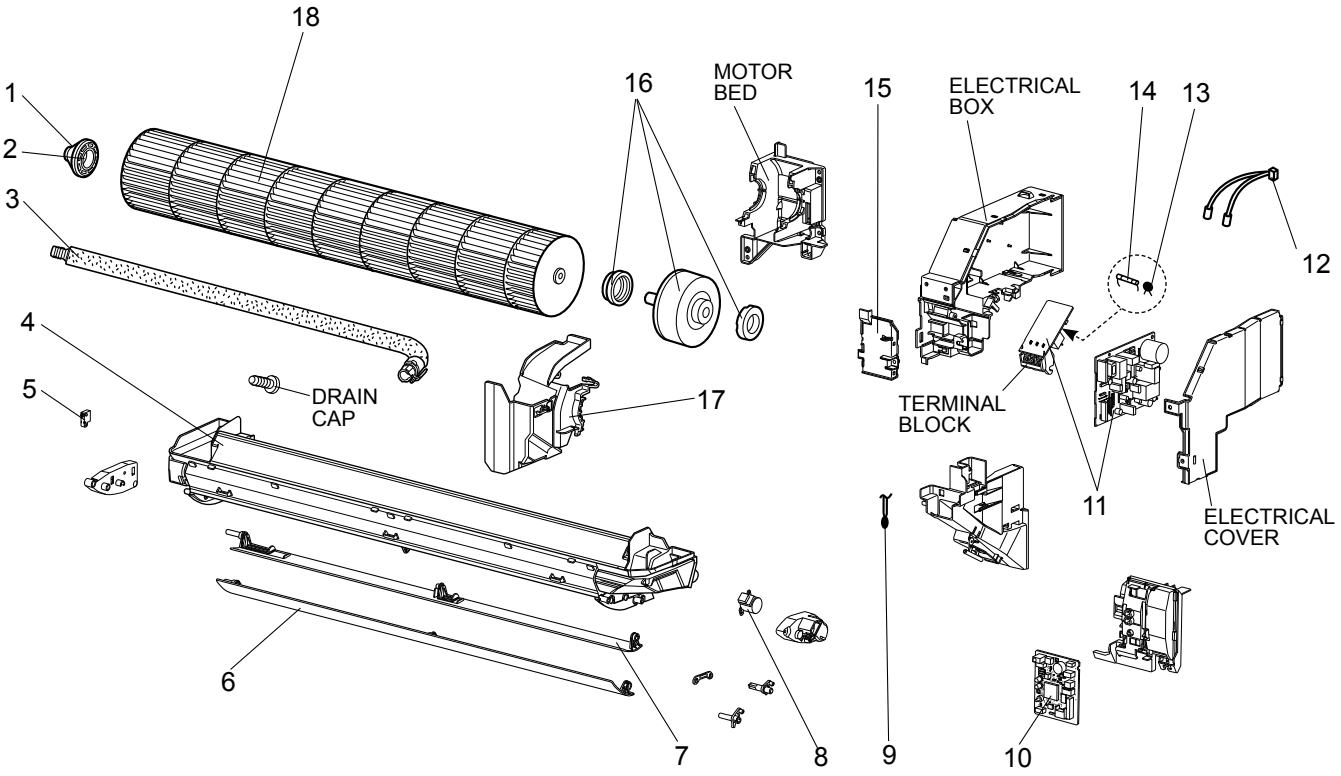

RoHS PARTS LIST

MSZ-GE22VAD2 MSZ-GE25VAD2 MSZ-GE35VAD2 MSZ-GE42VAD2 MSZ-GE50VAD2

1-4. INDOOR UNIT HEAT EXCHANGER

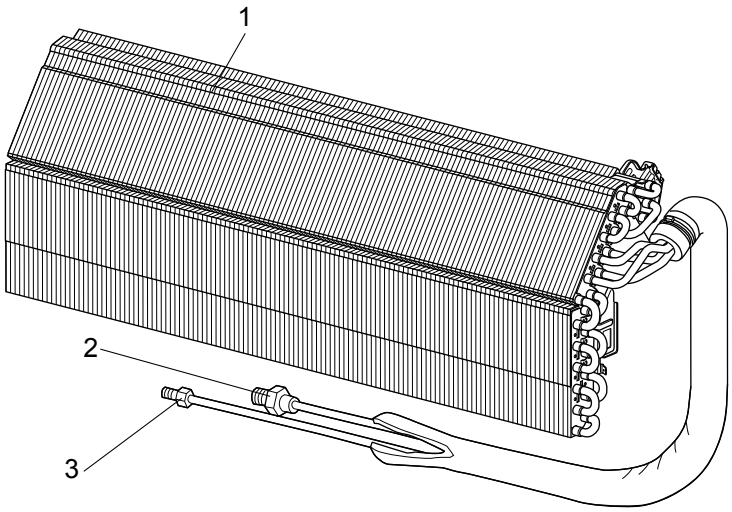

1-5. AIR CLEANING FILTER

ELECTROSTATIC ANTI-ALLERGY ENZYME FILTER

Every 3 months:
● Remove dirt by a vacuum cleaner.
When dirt cannot be removed by vacuum cleaning:
● Soak the filter and its frame in lukewarm water before rinsing it.
● After washing, dry it well in shade. Install all tabs of the air filter.
Every year:
● Replace it with a new air cleaning filter for best performance.
NOTE 1: Clean the filters regularly for best performance and to reduce power consumption.
NOTE 2: Dirty filters cause condensation in the air conditioner which will contribute to the growth of fungi such as mold. It is therefore recommended to clean air filters every 2 weeks.

Model	Part No.
MSZ-GE22VAD2 MSZ-GE25VAD2 MSZ-GE35VAD2 MSZ-GE42VAD2 MSZ-GE50VAD2	MAC-408FT-E

Pull to remove from the air flter

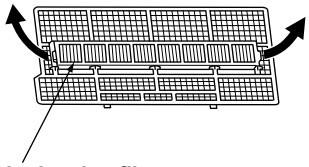

Air cleaning filter
(Blue bellows type)

MITSUBISHI ELECTRIC CORPORATION
HEAD OFFICE: TOKYO BUILDING, 2-7-3, MARUNOUCHI, CHIYODA-KU, TOKYO 100-8310, JAPAN
© Copyright 2016 MITSUBISHI ELECTRIC CORPORATION
Issued: Mar. 2017. No.OBB762 REVISED EDITION-A
Published: Sep. 2016. No.OBB762
Made in Japan
Specifications are subject to change without notice.